HABONIM
INDUSTRIAL VALVES LTD

BULLETIN A-104

H23 SERIES HIGH PRESSURE BALL VALVES

Size Range	Reduce bore: 1/4" - 2" (DN8 - DN50)
Class Range	Sizes 1/4"-1" Class 1500, (350 bar 5000 lbs)
	Sizes 1 1/4"-2" Class 900, (210 bar, 3000 lbs)
End Connections	Sch 40 & 80 (all sizes) Screwed and Socket weld
	Sch 160 (sizes 1/4" - 1" only) Screwed, Socket weld & Buttweld
Materials	Stainless Steel & Carbon Steel
Media Type	Liquids or Gases
Applications	Offshore, Oil and Gas, Chemical, Petrochemical, Refining, Energy
Operation	Wrench Operated, Actuated

The Standards Institution of Israel
SI
ISO 9001
Quality Assured Firm

Valve Specification

Item No.	DESCRIPTION	MATERIAL
1	**Body**	Stainless St. AISI 316L Carbon St. ASTM A105
2	**End Connector**	Stainless St. AISI 316L Carbon St. ASTM A105
3	**Ball**	Stainless St. 316 (17-4PH 1/2"-3/4")
4	**Stem**	Stainless St. 17-4PH
*5	**Seat Ring**	Delrin®, PEEK
*6	**Body Seal**	NBR, Viton®, Metal O-ring
*7	**Stem Thrust Seal**	Nylatron, PEEK
*8	**Gland Packing**	PTFE - 25% Carbon Filled, Viton®
9	**Gland**	Stainless St. 316
10	**Disc Spring**	Stainless St. 17-7PH
11	**Gland Nut**	Stainless St. 316 Carbon St. Zinc Plated
12	**Tab Washer**	Stainless St.
13	**Wrench**	Stainless St. Carbon St. Zinc Plated
14	**Serrated Washer**	Stainless St.
15	**Wrench Nut**	Stainless St. 316 Carbon St. Zinc Plated
16	**Body Bolts**	Stainless St. 316 A4-80 Carbon St. Zinc Plated Gr. 12.9

* Standard items for repair kits.

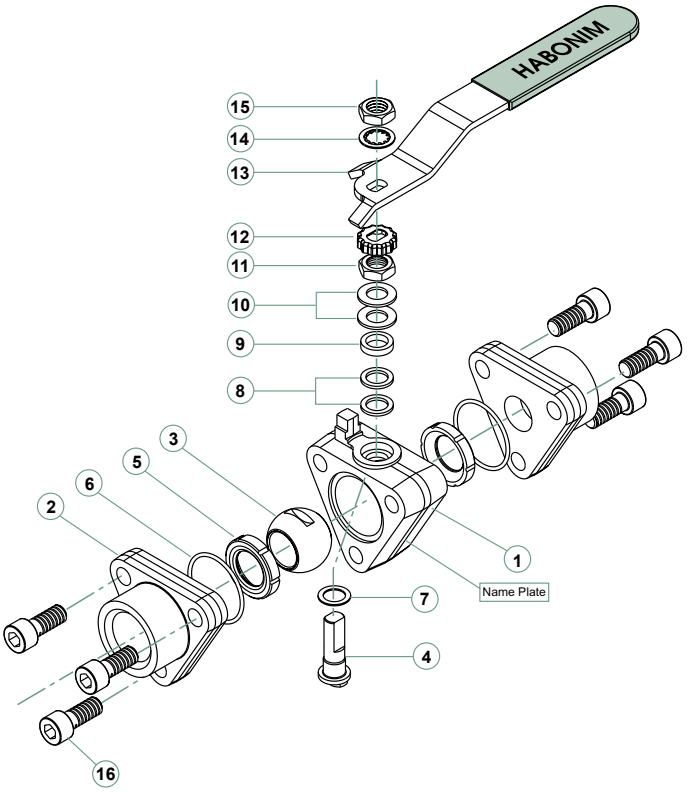

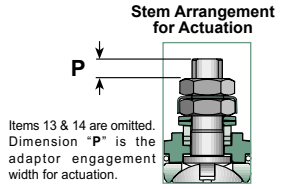

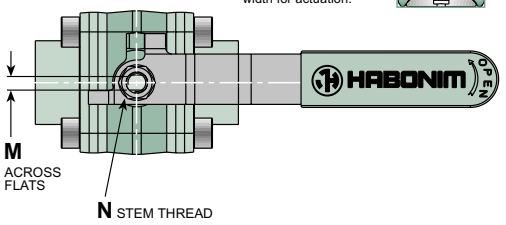

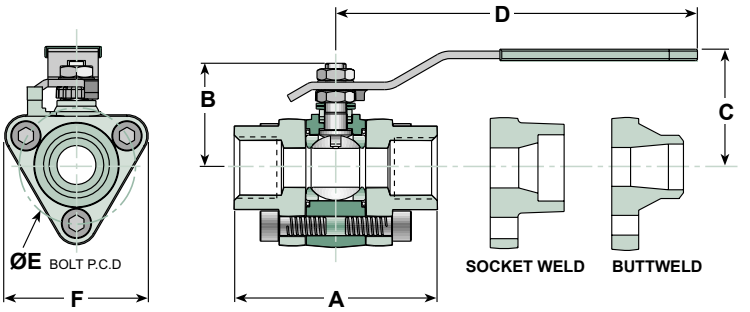

Pressure / Temperature Graph

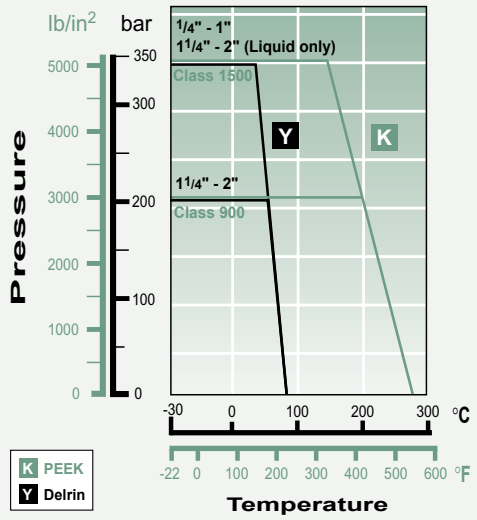

The pressure/ temperature curves are based on laboratory tests. Actual conditions can influence valve performance. When in doubt, please consult with Habonim.

Valve Dimensions (mm)

Size	Port	A	B	C	D	ØE	F	M	N Stem thread	P	Cv Coeff.	WEIGHT Kg.
1/4"	11.1	78.0	38.1	43.0	179	42.0	50.0	5.54	3/8" UNF	5.0	4.0	0.6
3/8"	11.1	78.0	38.1	43.0	179	42.0	50.0	5.54	3/8" UNF	5.0	6.0	0.6
1/2"	11.1	78.0	38.1	43.0	179	42.0	50.0	5.54	3/8" UNF	5.0	8.0	0.6
3/4"	14.3	85.0	40.5	45.5	179	50.0	60.0	5.54	3/8" UNF	5.0	12.0	0.9
1"	20.6	108	55.5	59.5	192	62.0	74.0	7.54	7/16" UNF	7.6	32.0	1.8
1 1/4"	25.4	121	60.5	64.5	192	78.0	88.0	7.54	7/16" UNF	7.6	57.0	3.0
1 1/2"	31.8	131	73.0	76.0	286	81.0	92.0	8.70	9/16" UNF	9.0	80.0	3.6
2"	38.1	142	78.0	81.0	286	92.0	105	8.70	9/16" UNF	9.0	104	5.2

NOTES

- Valves are available with Anti-Static design.
- Locking Devices can be fitted on the valves for securing valve position.
- Carbon steel valves are supplied with high tensile C/S bolts.
- Stainless steel valves are supplied with S/S bolts.
- Stainless steel valves with S/S bolts are limited to 4000 psi. For higher pressures, valves can be supplied with high tensile C/S bolts.

HABONIM
INDUSTRIAL VALVES LTD
Kfar Hanassi, Upper Galilee 1 Israel
Tel: 972-4-6914911
Fax: 972-4-6914902
E-Mail: habonim@habonim.co.il
www.habonim.com

Due to continious developement of our product range, we reserve the right to alter the dimensions and information contained in this leaflet as requires.

ISSUE: 00-12/00